GARANTÍA

El fabricante garantiza que este ventilador no presenta defectos de fabricación ni en los materiales presentes en el momento del transporte desde la fábrica, durante un período limitado de por vida a partir de la fecha de compra. Esta garantía es válida sólo para el comprador original. El fabricante acepta reparar dichos defectos sin cargo o, según nuestro criterio, reemplazar el ventilador de techo por un modelo comparable o superior. Para obtener el servicio de garantía, presente una copia del recibo de venta como prueba de la adquisición. Todos los costos de extracción y reinstalación son responsabilidad explícita del comprador. Los daños en el ventilador de techo producidos por accidentes, uso indebido o instalación incorrecta, o a causa de la colocación de accesorios de fijación que no son del fabricante de este ventilador, serán responsabilidad del comprador. El fabricante no asume ningún tipo de responsabilidad por la instalación del ventilador durante la garantía limitada de por vida. Cualquier servicio realizado por una persona no autorizada invalidará la garantía. Debido a las cambiantes condiciones climáticas, esta garantía no cubre cambios en el acabado de latón, óxido, picaduras, deslustre, corrosión o descascarado. Los ventiladores con acabado de latón mantienen su belleza cuando se les protege de las cambiantes condiciones climáticas. La garantía no cubre los elementos de vidrio incluidos con este ventilador. El reemplazo de piezas defectuosas para el ventilador de techo debe informarse dentro del primer año a partir de la fecha de compra. Para conocer el saldo de la garantía, llame a nuestro Departamento de Servicio al Cliente al 1-800-643-0067 para obtener la autorización para la devolución y las instrucciones de envío, de modo que podamos reparar o reemplazar el ventilador de techo. Un ventilador o piezas devueltas con un embalaje incorrecto son de responsabilidad única del comprador. No existe otro tipo de garantía explícita. El fabricante rechaza cualquiera y todas las garantías implícitas. La duración de cualquier garantía implícita que no pueda rechazarse se limita al período limitado de por vida especificado en nuestra garantía. El fabricante no será responsable de daños circunstanciales, resultantes o especiales que surjan en relación con el uso o el funcionamiento del producto, excepto que la ley indique lo contrario. Esta garantía le otorga derechos legales específicos, y usted tiene también otros derechos que varían según el estado. Esta garantía sustituye cualquier garantía previa.

Nota: Es normal que el ventilador se tambalee un poco, por lo cual no se debe considerar como un defecto.

LISTA DE PIEZAS DE REPUESTO

Para obtener piezas de repuesto, llame a nuestro Departamento de Servicio al Cliente al 1-800-643-0067, de lunes a jueves de 8 a.m. a 6 p.m., y los viernes de 8 a.m. a 5 p.m., hora estándar del Este.

PIEZA	DESCRIPCIÓN	PIEZA #
F	Abrazadera del aspa	104000-0318FL
G	Aspa	108001-4043BK
M	Pantalla de vidrio	991300-0547TR

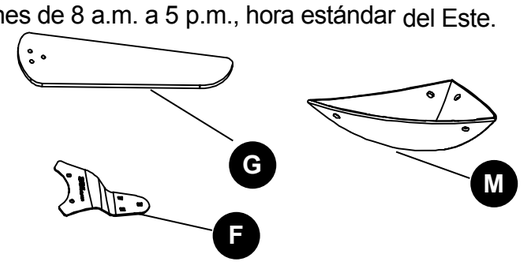

Impreso en China

Harbor Breeze® son marcas registradas de LF, LLC. Todos los derechos reservados.

Lowes.com/harborbreeze

ITEM #0451808

IMPACT CEILING FAN

MODEL #00966

UL MODEL #IPT48

Harbor Breeze® is a registered trademark of LF, LLC. All rights reserved.

Español p. 16

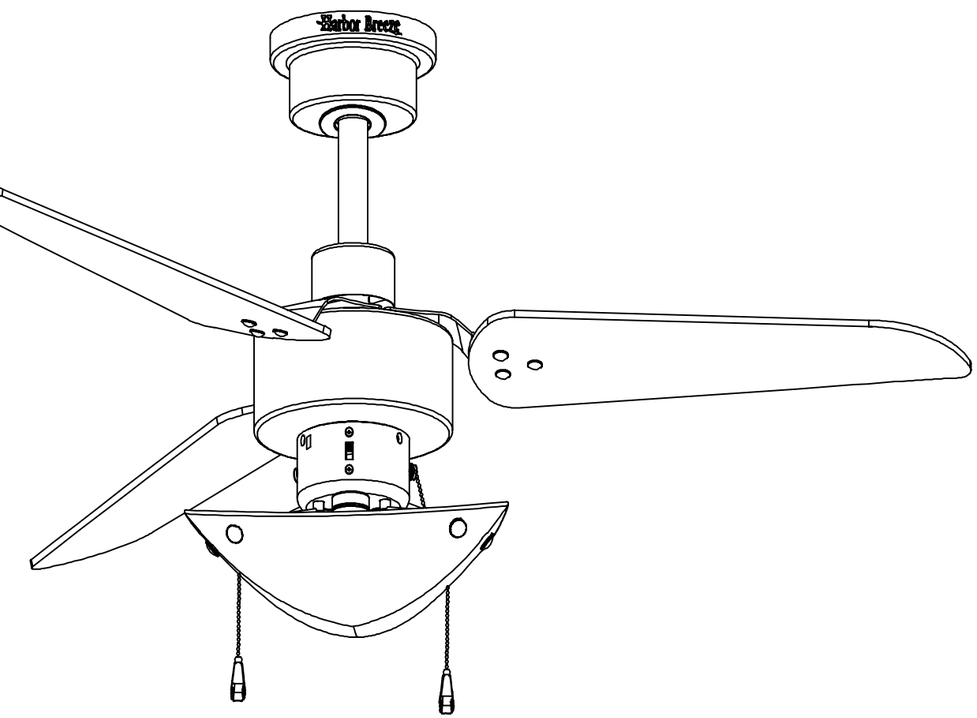

ATTACH YOUR RECEIPT HERE

Serial Number _____ **Purchase Date** _____

Questions, problems, missing parts? Before returning to your retailer, call our customer service department at 1-800-643-0067, 8 a.m. – 6 p.m., EST, Monday - Thursday, 8 a.m. – 5 p.m., EST, Friday.

EB14185

Lowes.com/harborbreeze

TABLE OF CONTENTS

Safety Information..... 3

Package Contents..... 4

Hardware Contents.....5

Preparation.....5

Assembly Instructions 6

Operation Instructions 13

Care and Maintenance 14

Troubleshooting..... 14

Warranty.....15

Replacement Parts List.....15

SAFETY INFORMATION

READ AND SAVE THESE INSTRUCTIONS

Please read and understand this entire manual before attempting to assemble, operate, or install the product.

- When using an existing outlet box, be sure the box is securely attached to the building structure and can support the full weight of the fan, so as to avoid potential serious injury or death.
- All wiring must be in accordance with the National Electrical Code “ANSI/NFPA 70-1999” and local electrical codes. Electrical installation should be performed by a qualified licensed electrician.
- DO NOT use bulbs with a wattage greater than the maximum value stated on the fixture and in this manual. Using a higher wattage bulb than specified will increase fixture temperature and cause risk of fire.
- Disconnect the electrical supply circuit to the fan before installing light kit.
- Electrical diagrams are for reference only.
- Using a full range dimmer switch to control fan speed will cause a loud, humming noise from fan. To reduce the risk of fire or electric shock, DO NOT use a full range dimmer switch to control.
- The net weight of this fan including the light kit is: 15.4 lbs.

WARNING

- **ELECTRIC SHOCK HAZARD** - To reduce the risk of electric shock, do not use this fan with any solid-state speed control device.
- **ELECTRIC SHOCK HAZARD** - To reduce the risk of electric shock, make sure electricity has been turned off at the circuit breaker or fuse box before beginning installation.
- **PERSONAL INJURY HAZARD** - To reduce the risk of injury to persons, install fan so that the blade is at least 7 ft. above the floor.
- **FIRE, ELECTRIC SHOCK OR PERSONAL INJURY HAZARD -** To reduce the risk of fire, electric shock, or personal injury, mount to outlet box marked “ACCEPTABLE FOR FAN SUPPORT OF 35.1 lbs OR LESS” and use mounting screws provided with the outlet box. Most outlet boxes commonly used for the support of lighting fixtures are not acceptable for fan support and may need to be replaced. Consult a qualified electrician if in doubt.

CAUTION

- **PERSONAL INJURY HAZARD** - Reduce the risk of personal injury, do not bend the blade brackets when installing the brackets, balancing the blades, or cleaning the fan. DO NOT insert foreign objects in between rotating fan blades.

PACKAGE CONTENTS

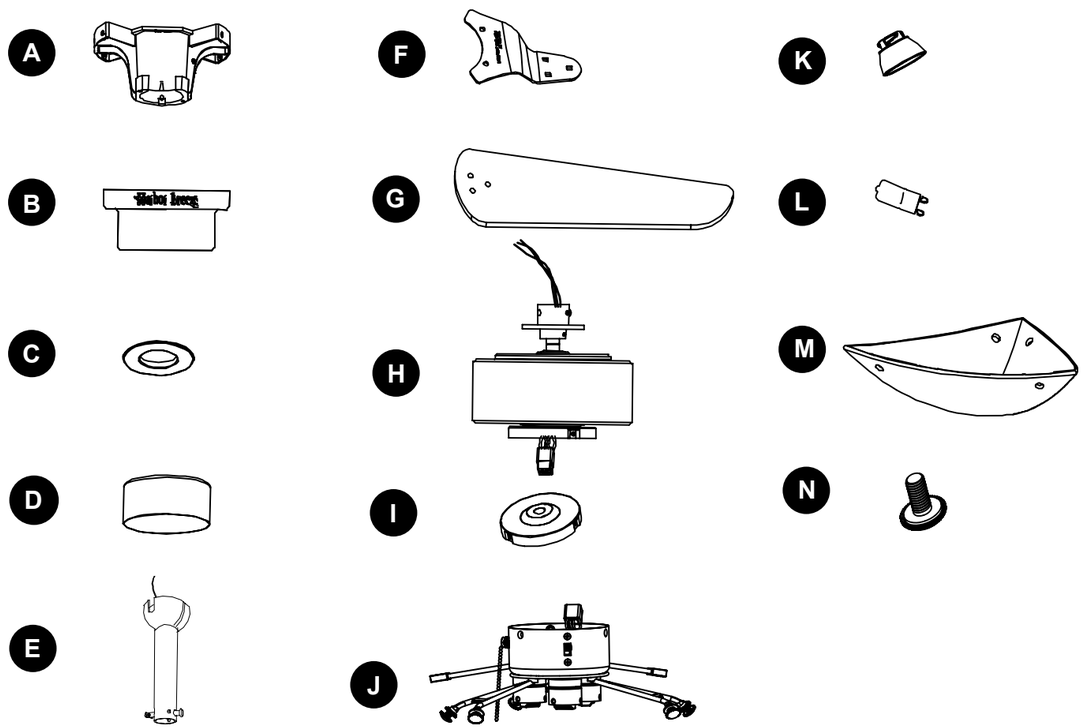

PART	DESCRIPTION	QUANTITY
A	Mounting Bracket (preassembled to Canopy (B))	1
B	Canopy	1
C	Canopy Cover (preassembled to Canopy (B))	1
D	Yoke Cover	1
E	Downrod	1
F	Blade Bracket	3
G	Blade	3
H	Motor Housing Assembly	1
I	Switch Housing Cover (preassembled to Motor Housing Assembly (H))	1
J	Light Kit Assembly	1
K	Bulb Cover	3
L	Bulb	3
M	Glass Bowl	1
N	Finial (preassembled to Light Kit Assembly (J))	6

HARDWARE CONTENTS (shown actual size)

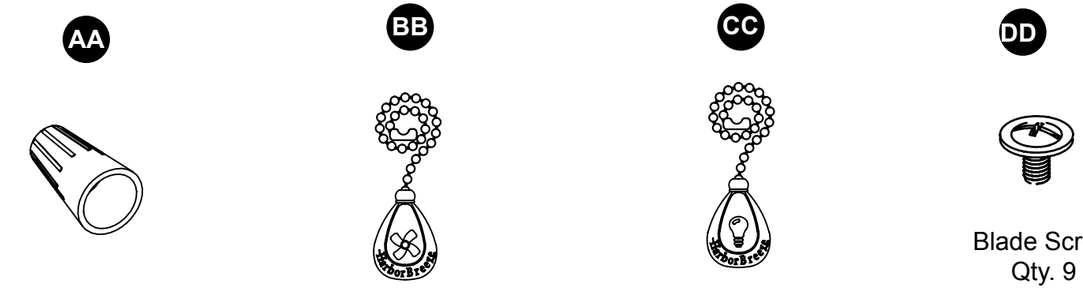

Wire Connector Qty. 4

Fan Pull Chain Extension Qty. 1 (NOT TO SCALE)

Light Pull Chain Extension Qty. 1 (NOT TO SCALE)

Blade Screw Qty. 9

Decorative Nut Qty. 9

Blade Bracket Screw with Washer Qty. 6

PREPARATION

Before beginning assembly of product, make sure all parts are present. Compare parts with package contents list and hardware contents list. If any part is missing or damaged, do not attempt to assemble the product.

Estimated Assembly Time: 45 minutes

Tools Required for Assembly (not included): Phillips screwdriver, step ladder, electrical tape, pliers, wire cutters, wire strippers.

1. Determine mounting method.
   A-Downrod Mount (standard or angled ceiling)
   B-Angle Mount (standard ceiling only)

   IMPORTANT: If angle mounting, check to make sure the ceiling angle is not steeper than 20°.

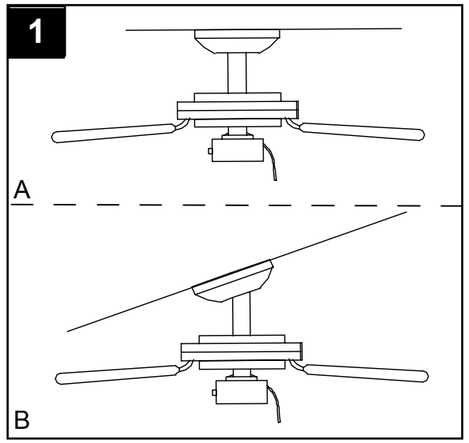

2. Install mounting bracket (A) to outlet box (not included) by sliding mounting bracket (A) over the two outlet box screws (not included). Securely tighten two outlet box screws.

   IMPORTANT: If angle mounting, make sure open end of mounting bracket (A) is installed facing the ceiling.

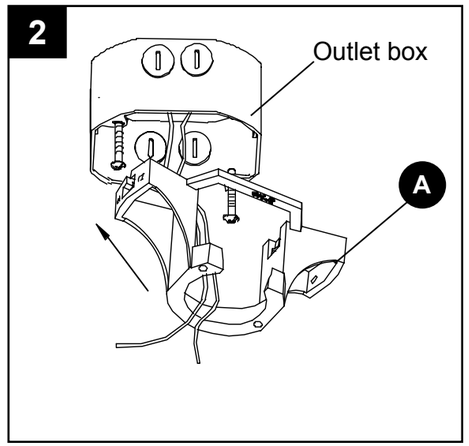

3. Remove paperboards from the motor housing assembly (H) and discard.

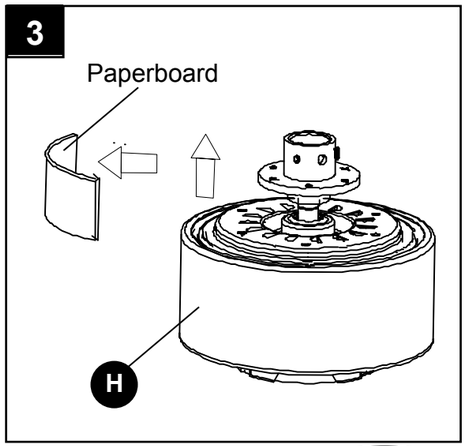

4. Remove preassembled pin and clip from downrod (E). Save for later use.

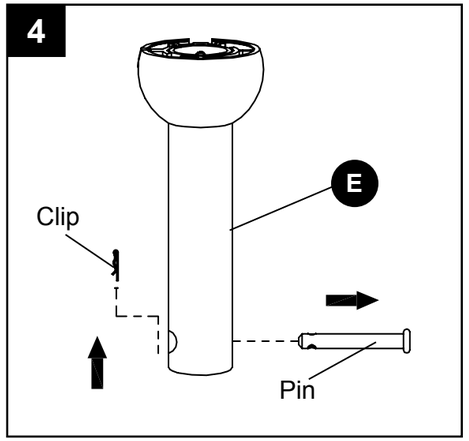

5. Insert downrod (E) through canopy (B), canopy cover (C) and yoke cover (D). Thread wires from motor housing assembly (G) through downrod (E).

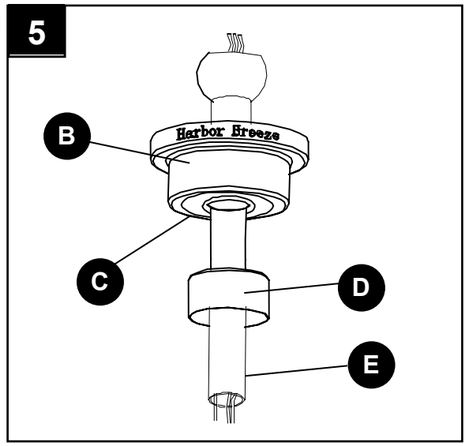

6. Loosen preassembled set screws from the yoke on motor housing assembly (H). Slip downrod (E) into yoke, aligning holes on both parts. Insert previously removed pin through holes on yoke and downrod (E), then insert previously removed clip into the pin until it snaps into place.

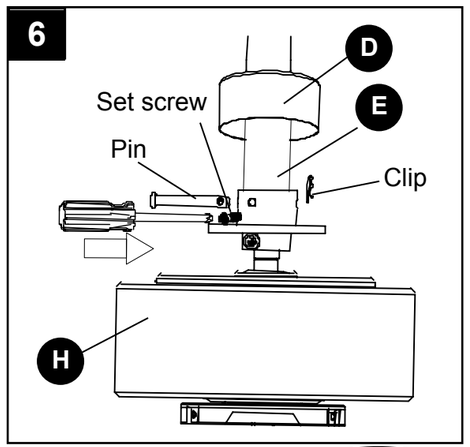

7. Tighten set screws. Slide the yoke cover (D) down over the motor housing assembly (H).

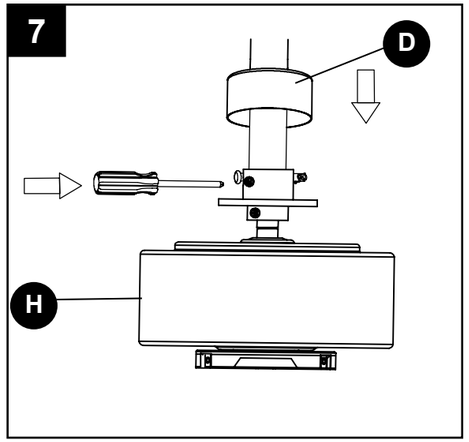

8. Install hanger ball on the top of downrod (E) into mounting bracket (A) opening. Rotate fan until slot on hanger ball engages the tab on the mounting bracket (A).

WARNING: Be careful when aligning the tab to the slot. If not fully engaged, the fan could fall, which could result in serious injury or death.

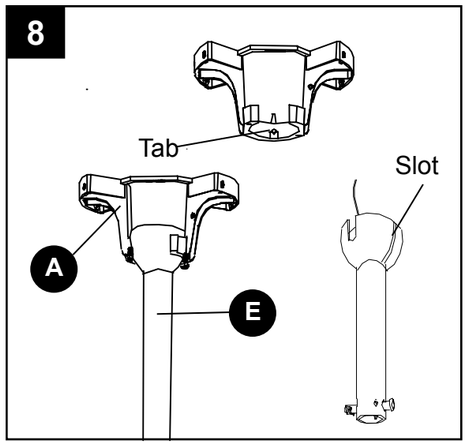

9. Connect **BLACK** and **BLUE** wires from fan to **BLACK** wire from ceiling. Connect **WHITE** wire from fan to **WHITE** wire. Connect all **GROUNDED (GREEN)** wires from fan to **GREEN** wire from ceiling.

Note: Black wire is hot power for fan. Blue wire is hot power for light kit. White wire is common for fan and light kit. Green wire is grounded wire. If house wires are different colors than referred to above, stop immediately and consult a professional electrician to determine proper wiring.

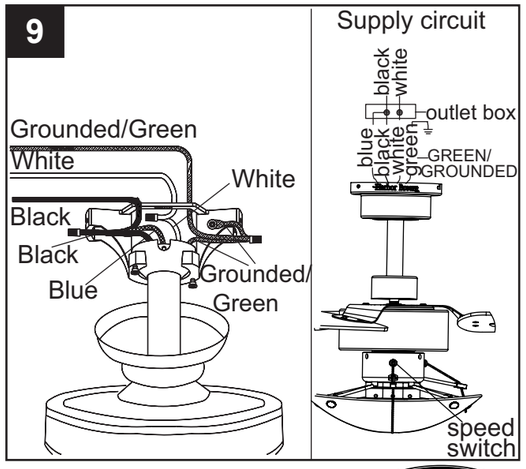

10. Twist wire ends together and screw wire connectors (AA) on in a clockwise direction. Tape wire connectors (AA) and wires together.

Note: Wires should be spread apart with grounded conductor and equipment-grounding conductor on one side of outlet box and ungrounded conductor on other side. After making connections, make sure bare wire or wire strands are NOT visible. Place green and white connections on opposite side of box from black and blue connections. Splices should be turned upward and pushed carefully up into outlet box.

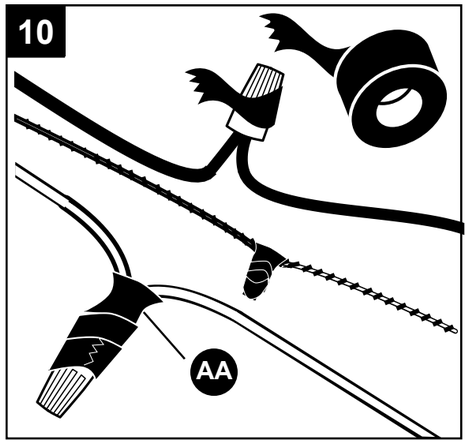

Hardware Used

AA Wire Connector 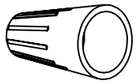 x 4

11. Slide canopy (B) up to ceiling and over two screws on the mounting bracket (A). Rotate canopy (B) to lock it into place. Securely tighten screws.

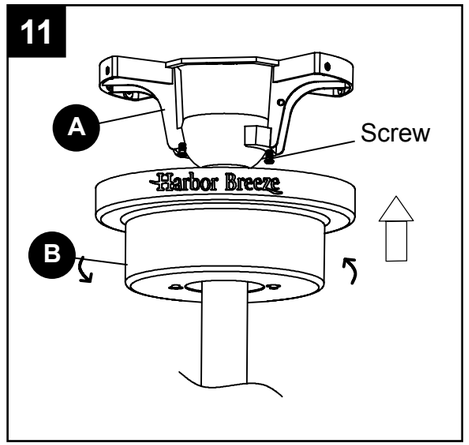

12. Slide the canopy cover (C) over the two screws and rotate clockwise until it locks.

Note: Adjust the screws as necessary until the canopy (B) and the canopy cover (C) are snug.

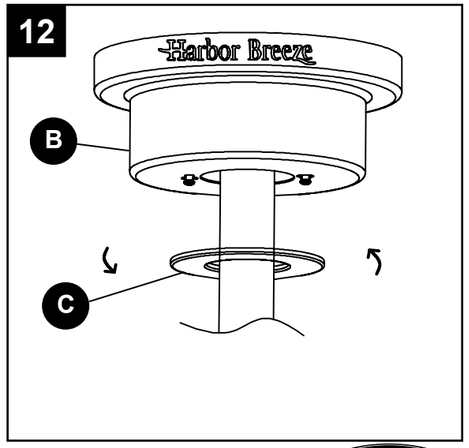

13. Attach blade (G) under blade bracket (F) using three decorative nuts (EE) and blade screws (DD). Securely tighten blade screws (DD) into decorative nuts (EE). Repeat for remaining blades (G), blade brackets (F), decorative nuts (EE) and blade screws (DD).

Hardware Used

DD Blade Nut		x 9
EE Decorative Screw		x 9

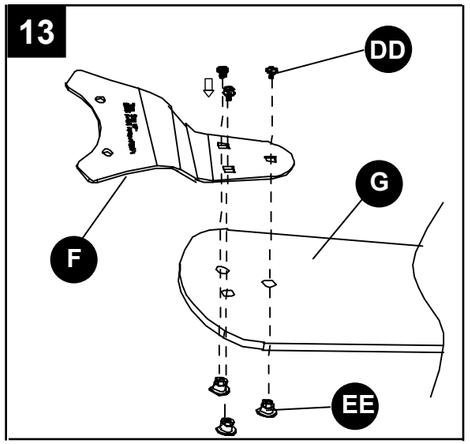

14. Attach blade bracket (F) to motor housing assembly (H) with two blade bracket screws and washers (FF). Securely tighten blade bracket screws and washers (FF). Repeat for remaining blade assemblies.

Hardware Used

FF Blade Bracket Screw with Washer		x 6

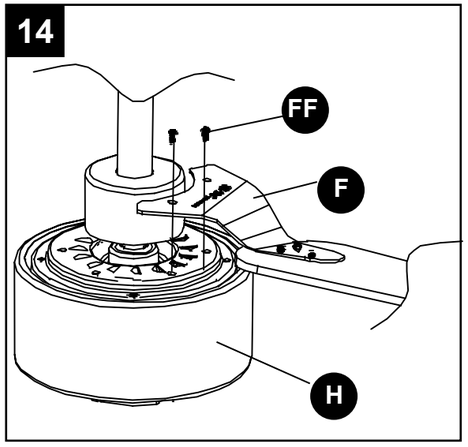

15. Remove preassembled screws from switch housing cover (I).

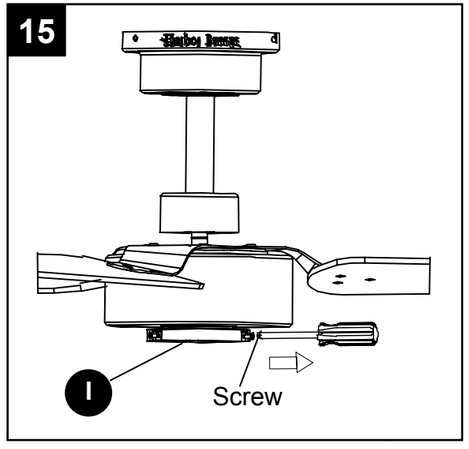

16. Connect male plug from motor housing assembly (H) to the female plug from light kit assembly (J).

WARNING: To avoid possible fire or shock, power should be turned off prior to the removal of the light kit.

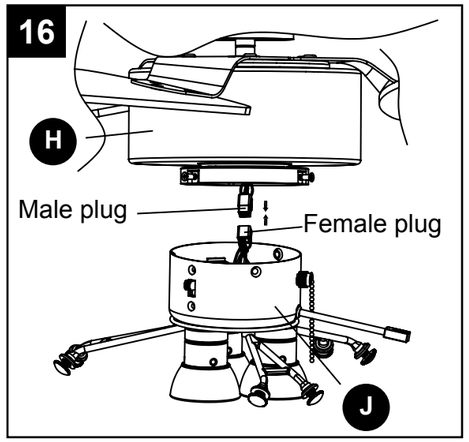

17. Attach light kit assembly (J) to switch housing cover (I). Align light kit assembly (J) holes with switch housing cover (I) holes. Install previously removed screws (Step 15, page 10) and tighten securely.

Note: The wider gap in the edge of the switch housing cover (I) should align with reverse switch on the light kit assembly (J).

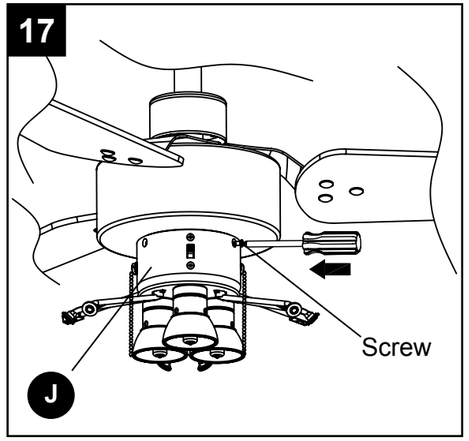

18. Install bulbs (L) into sockets.

Note: This fan has an energy-saving wattage limiter included. If you replace the bulbs with over 190 watts, the light will automatically turn off. Please ensure the bulb wattage is always below 190 watts.

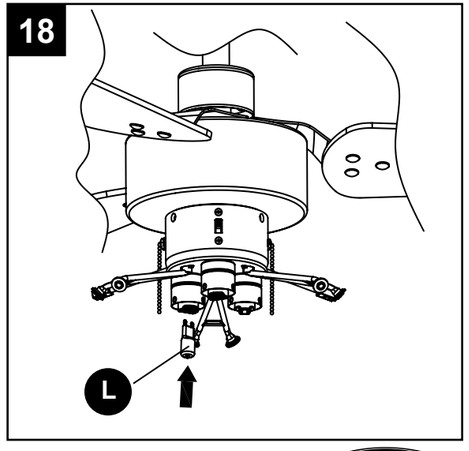

19. Insert bulb covers (K) through bulbs (L) and into the sockets.

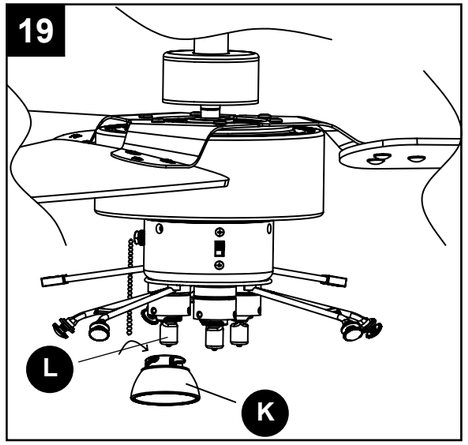

20. Remove preassembled finials (N) from poles on light assembly kit (J).

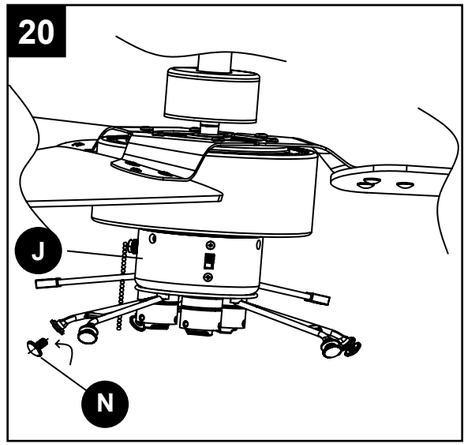

21. Place glass bowl (M) on poles on light kit assembly (J) until flush against rubber washer. Replace finials (N) and securely tighten.

Note: Two people are recommended for this step. If the holes of the glass bowl are not match the light kit poles, please adjust the poles slightly.

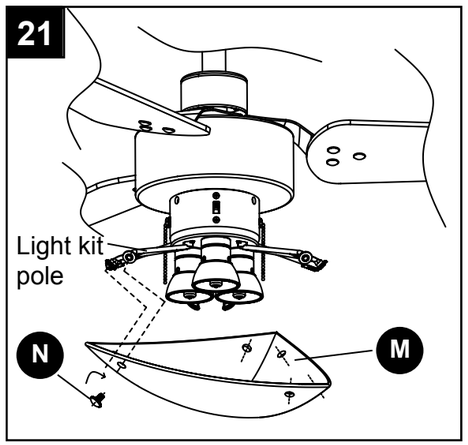

22. Thread fan pull chain and light kit pull chain through holes of pull chain poles. Attach fan pull chain extension (BB) and light kit pull chain extension (CC) to corresponding chains.

Hardware Used

BB Fan Pull Chain Extension 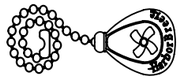 x 1

CC Light Pull Chain Extension x 1

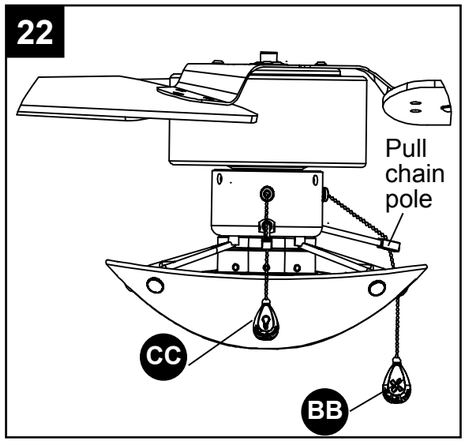

OPERATION INSTRUCTIONS

1. PULL CHAINS:

- The fan pull chain is for motor speed control: High, Medium, Low and Off. Pull the chain once for each position.
- The light pull chain controls the light fixture either ON or OFF with each pull the chain.

2. REVERSE SWITCH:

When the season changes, you may want to change the direction the fan spins. To switch between clockwise and counterclockwise rotation, flip the fan reversal switch.

Note: Wait for fan to stop before reversing switch.

- In warmer weather, counterclockwise rotation creates a downward air flow, which cools the air. Push the switch DOWN and see a Sun icon.
- In cooler weather, clockwise rotation creates an upward air flow, which moves hot air from the ceiling into the room. Push the switch UP and see a Snowflake icon.

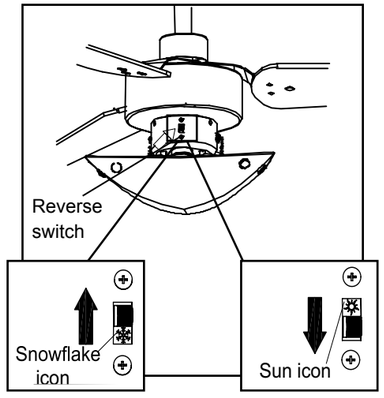

CARE AND MAINTENANCE

- To reduce the risk of fire, electric shock or injury to persons, care and maintain this fan.
- **IMPORTANT:** Shut off main power supply before beginning any maintenance.
- DO NOT use water or detergents when cleaning the fan or fan blades. A dry dust cloth or lightly dampened cloth will be suitable for most cleaning.
- Clean fan housing with only a soft brush or lint-free cloth to avoid scratching the finish. Clean blades with a lint-free cloth. You may occasionally apply a light coat of furniture polish to blades for added protection.
- At least twice each year, tighten all screws and lower canopy to check mounting bracket screws and downrod assembly.
- Bulb Replacement: Use three 40-watt max. G9 halogen bulbs.

TROUBLE SHOOTING

PROBLEM	POSSIBLE CAUSE	CORRECTIVE ACTION
Fan blades do not move.	1. Chain switch is “off”. 2. Faulty wire connection. 3. Reverse switch not engaged.	1. Pull chain switch. 2. Turn power off. Loosen canopy; check all connections. 3. Push switch firmly either way.
Noisy operation.	1. Blades are loose. 2. Cracked blade. 3. Unapproved speed control.	1. Tighten all blade screws. 2. Replace blades (call customer service). 3. Replace with an approved speed control device.
Excessive wobbling.	1. Blades are loose. 2. Blade brackets incorrectly attached. 3. Unbalanced blades. 4. Fan not securely mounted. 5. Fan too close to vaulted ceiling.	1. Tighten all blade screws. 2. Reinstall blade brackets. 3. Use blade balancing kit included. 4. Turn power off. Carefully loosen canopy and remount securely. 5. Lower fan or move it to another location.

WARRANTY

The manufacturer warrants this fan to be free from defects in workmanship and material present at time of shipment from the factory for lifetime limited from the date of purchase. This warranty applies only to the original purchaser. The manufacturer agrees to correct such defect at no charge or at our option replace the ceiling fan with a comparable or superior model.
To obtain warranty service, present a copy of your sales receipt as proof of purchase. All cost of removal and reinstallation are the expressed responsibility of the purchaser. Any damage to the ceiling fan by accident, misuse or improper installation, or by affixing accessories not produced by the manufacturer of the fan, are at the purchaser’s own responsibility. The manufacturer assumes no responsibility whatsoever for fan installation during the lifetime limited warranty. Any service performed by an unauthorized person will render the warranty invalid.

Due to varying climatic conditions, this warranty does not cover changes in brass finish, rusting, pitting, tarnishing, corroding or peeling. Brass finish fans maintain their beauty when protected from varying weather conditions. Any glass provided with this fan is not covered by the warranty.
Any replacement of defective parts for the ceiling fan must be reported within the first year from the date of purchase. For the balance of the warranty, call our customer service department at 1-800-643-0067 for return authorization and shipping instructions so that we may repair or replace the ceiling fan. Any fan or parts returned improperly packaged is the sole responsibility of the purchaser. There is no further expressed warranty. The manufacturer disclaims any and all implied warranties.

The duration of any implied warranty which can not be disclaimed is limited to the lifetime limited period as specified in our warranty. The manufacturer shall not be liable for incidental, consequential or special damages arising at or in connection with product use or performance except as may otherwise be accorded by law. This warranty gives you specific legal rights and you also have other rights which vary from state to state. This warranty supersedes all prior warranties.
Note: A small amount of “wobble” is normal and should not be considered a defect.

REPLACEMENT PARTS LIST

For replacement parts, call our customer service department at 1-800-643-0067, 8 a.m. - 6 p.m., EST, Monday - Thursday, 8 a.m. - 5 p.m., EST, Friday.

PART	DESCRIPTION	PART #
F	Blade Bracket	104000-0318FL
G	Blade	108001-4043BK
M	Glass Bowl	991300-0547TR

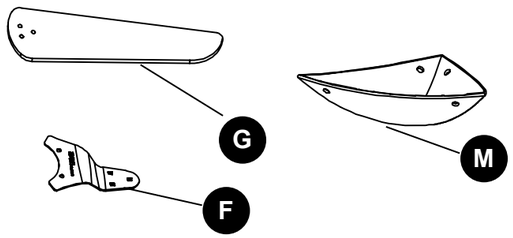

Printed in China
Harbor Breeze® registered trademark of LF, LLC. All rights reserved.